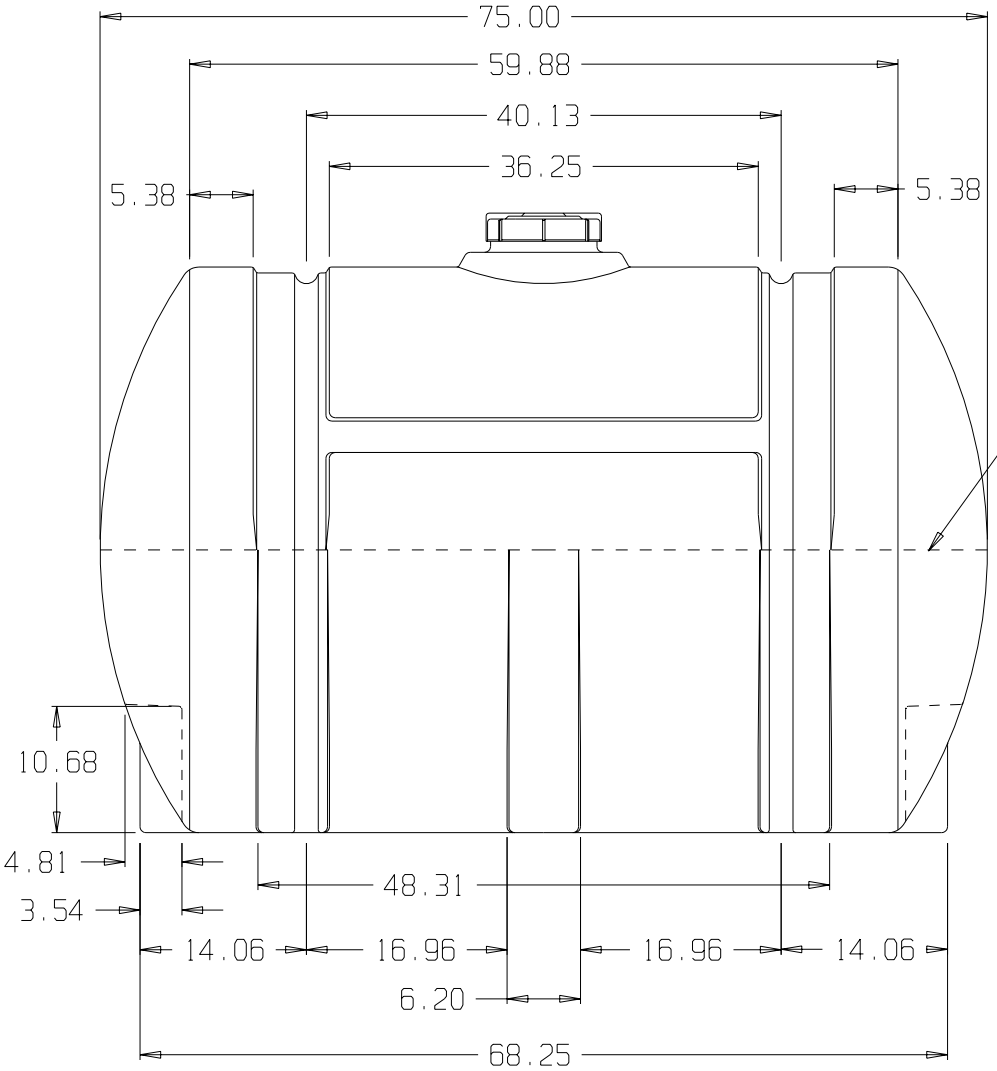

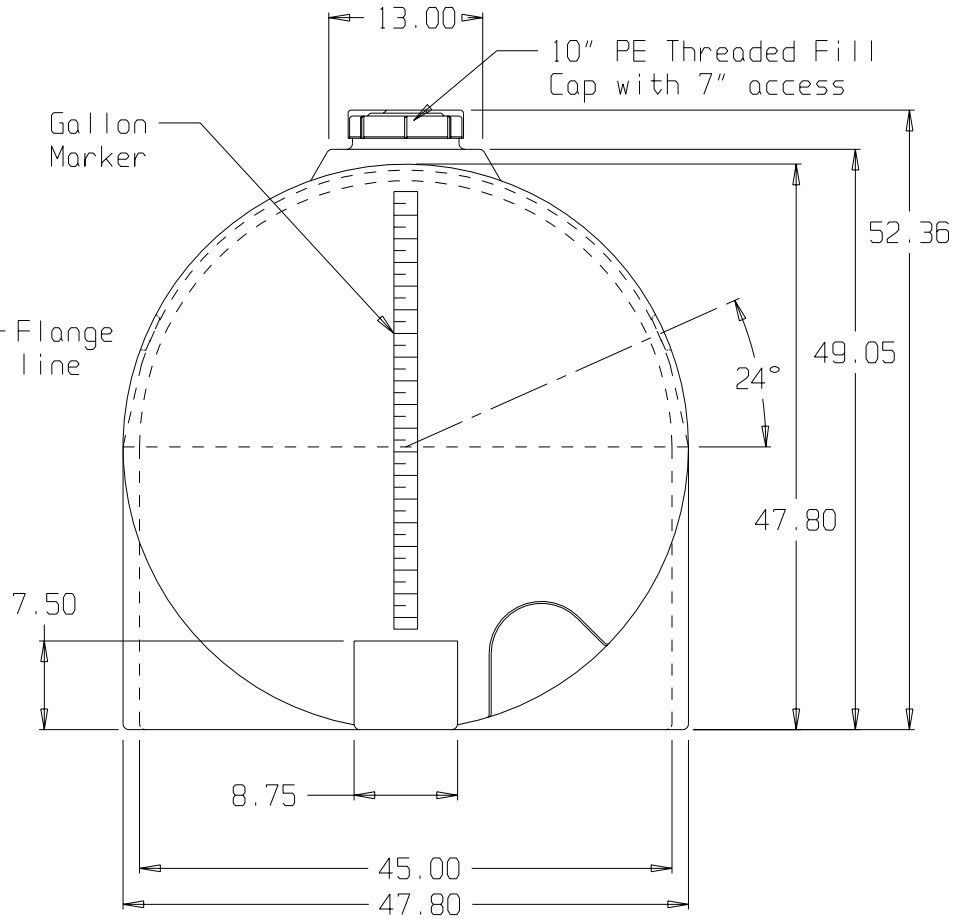

SNYDER INDUSTRIES INC.

(all dimensions in inches)

BASE FITTINGS TO BE LEFT INSTALLED AT TIME OF SHIPMENT PER SII PROCEDURE

PART # TANK: 140--L/P

525 GALLON HORIZONTAL LEG TANK

REF#: 0000

11/20/02